NOVA2 45 KG

Fitting instructions

1800 mm

2400 mm

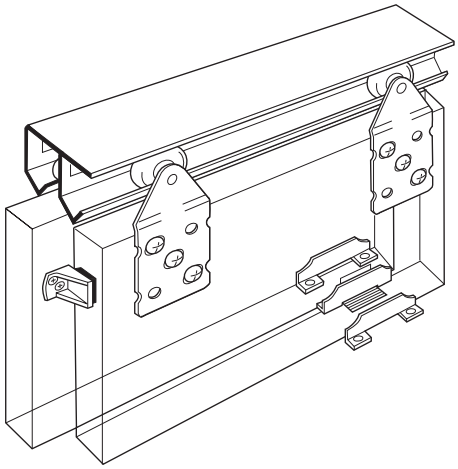

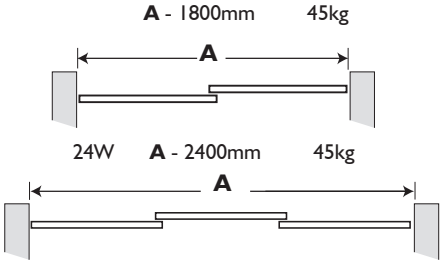

B	16	19	22	25	29	32	35	38	40
C	-	1	2	15	19	22	25	28	30

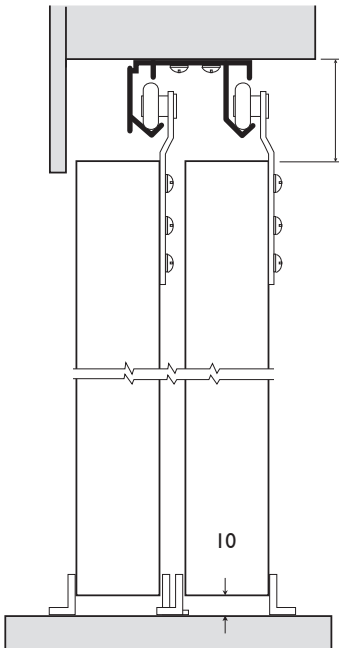

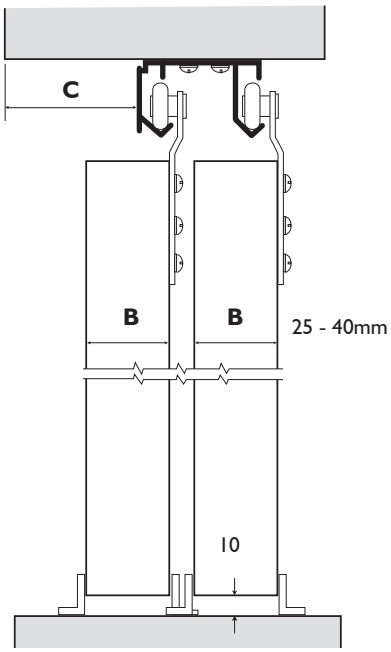

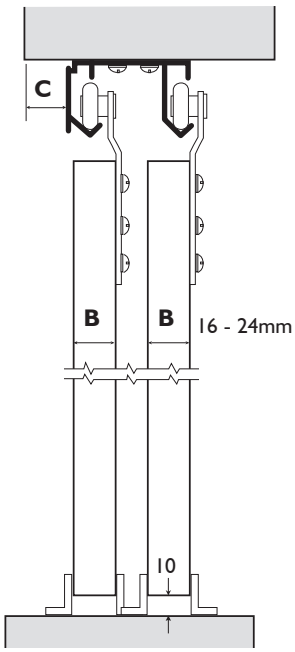

1

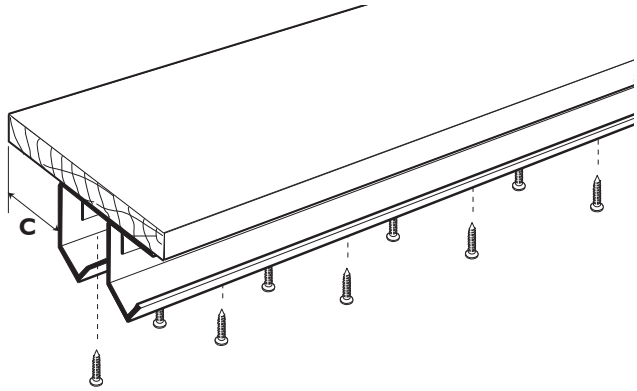

2

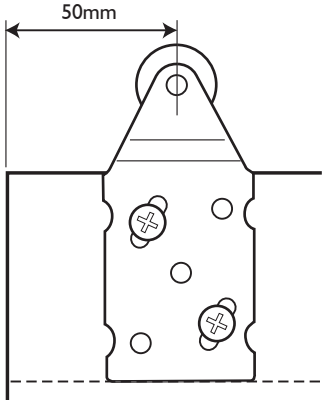

3

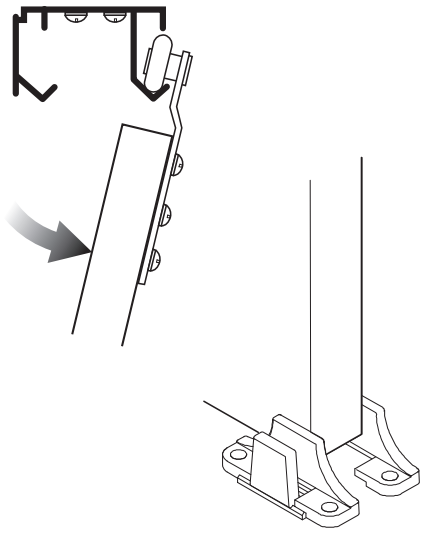

4

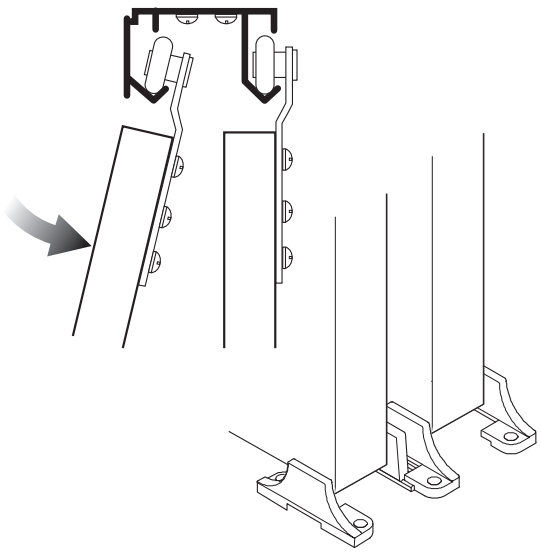

5

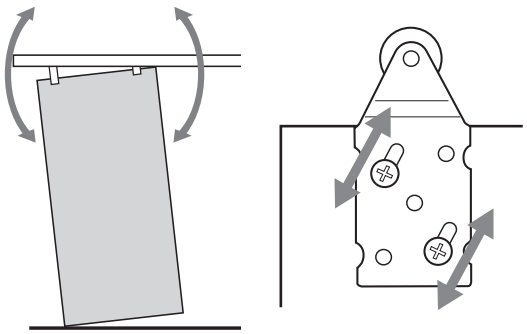

6

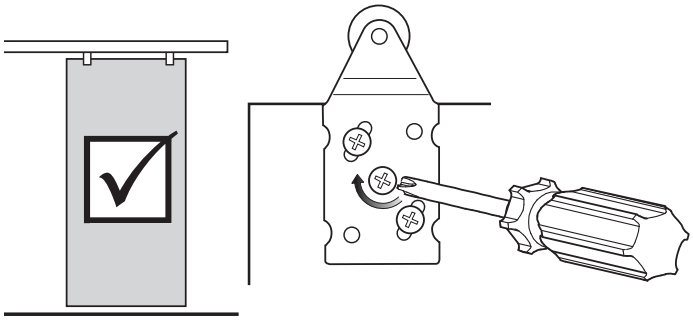
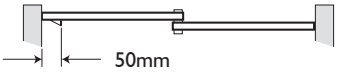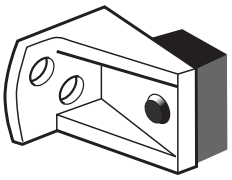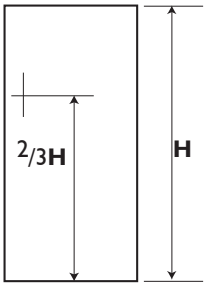
7